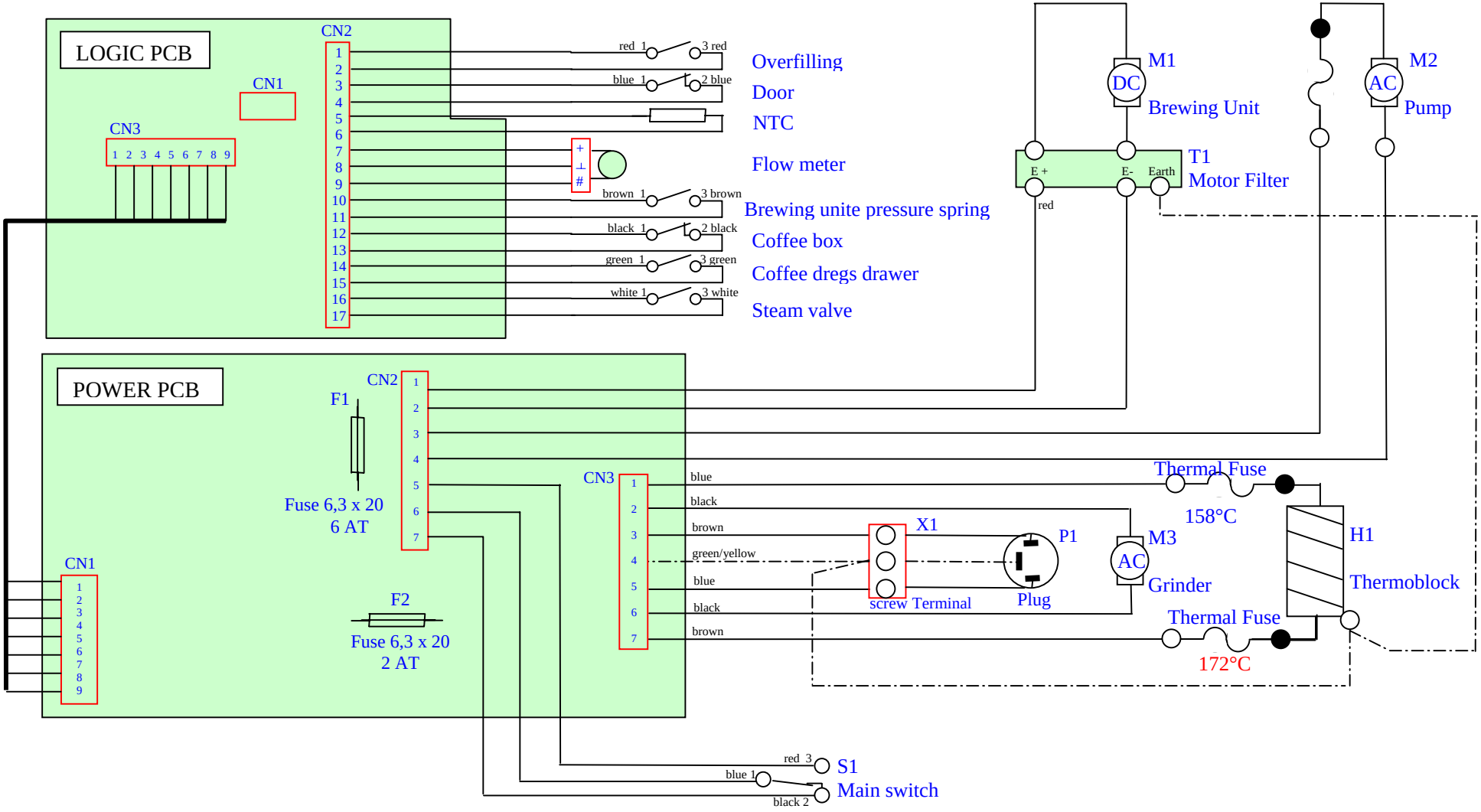

CA FAMOSA CF220/250/260

Wiring diagram 220 V – 240 V